IMF 28 HC

Ice Finger

Self-contained ice maker - Paddle system
Daily production up to 31 kg

Hotel	■■■
Restaurant	■■■■■
Fast food	■
Bar	■■■■■■
Disco	■■■■
Fish market	
Supermarket	
Medical & SPA	
Industry	

▶ Position n°

▶ Features & Plus

- Hollow cube
- AISI 304 SS Scotch Brite finish
- Tropical class +43°C
- Removable and cleanable air filter
- Air or water cooling system
- Easy cleanable internal rounded surfaces
- HCFC-Free insulated storage
- FDA approved -ABS water basin
- Basin tipping safety system
- RoHS Free
- Disappearing insulated door
- Electromechanical operation
- ON-OFF rocker switch
- Automatic water charge
- Standard and special voltages
- HFC Free

AISI 304 SS Scotch Brite finish

Removable and cleanable air filter

FDA approved - ABS water basin

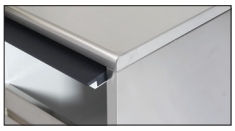

Disappearing insulated door

▶ Available ice cube size

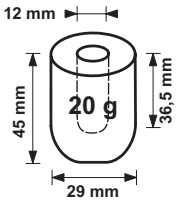

▶ Prod. 24h

Air temp.		Water temp.		kg	lbs
10° C	50° F	7° C	45° F	31	68
21° C	70° F	15° C	60° F	22	49

2 Years Warranty
subject to limitations

▶ Certifications available for this model

www.bremaice.it
info@bremaice.it

We are Brema

Ice Finger

IMF 28 HC

BREMA Ice Makers

Self-contained ice maker - Paddle system
Daily production up to 31 kg

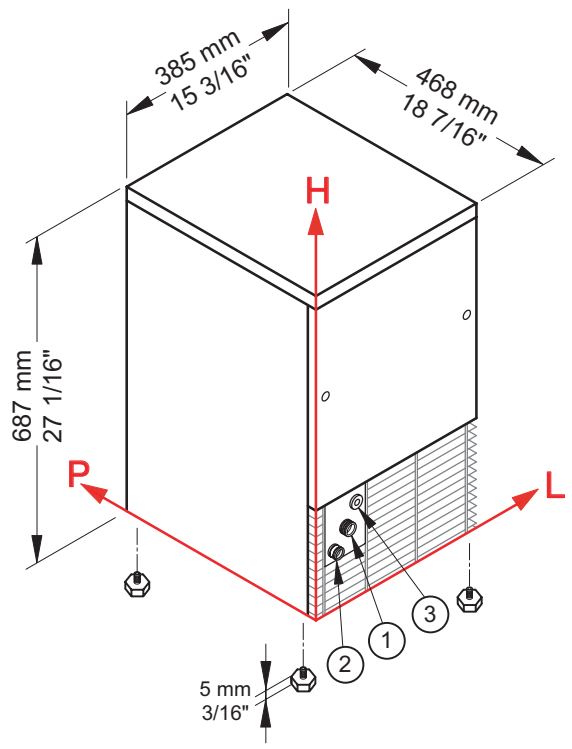

▶ Working conditions

- Location: **Indoor**

	Min	Max
Ambient temperature	+10° C / +50° F	+43° C / 110° F
Water temperature	+3° C / +37° F	+32° C / +90° F
Voltage	-10%	+10%
Water inlet pressure	1bar (14 psi)	6bar (84 psi)

▶ Performances

Air temperature	Water temperature 7° C	45° F	15° C	60° F	21° C	70° F
10° C	31 kg					
50° F		68 lbs				
21° C			22 kg			
70° F				49 lbs		
32° C					16 kg	
90° F						35 lbs

▶ Connections

All measures are referred to the rear bottom-left corner (L-H-Ø)

① Water in.: 111 mm / 4 6/16" - 175 mm / 6 14/16" - 3/4"
② Water out.: 49 mm / 1 15/16" - 130 mm / 5 2/16" - 24 mm / 15/16"
③ Electrical connections: 156 mm / 6 2/16" - 211 mm / 8 5/16"

▶ Technical information

Production in 24h	22 kg / 49 lbs
Store capacity, up to	8 kg / 18 lbs
Cooling system	A - W
Kind of cube	A-20g
Refrigerant	R290
Standard voltage	220-240 V ~ 50 Hz
Average power consumption	300 W
Fuse	10 A
Electrical consumption	31 kWh/100kg

Water consumption	A: 3 l/kg - 36 gal/100 lbs
	W: 17 l/kg - 204 gal/100 lbs
Sizes (L-P-H mm)	385 - 468 - 687
(L-P-H in)	15 3/16 - 18 7/16 - 27 1/16
Sizes with pack (L-P-H mm)	440 - 520 - 880
(L-P-H in)	17 5/16 - 20 8/16 - 34 10/16
Net weight	38 kg / 84 lbs
Gross weight	45 kg / 99 lbs
Finish	AISI 304 stainless steel, scotch brite

All the technical information must be considered at the following conditions:
Sizes without feet
Standard Cube (20 g)
Ambient temperature +21° C
Water temperature +15° C
Electrical consumption at +32° C (standard voltage)
Average power consumption at +43° C (standard voltage)

Models and specifications are subject to change without notice

Rev. 01 - Issued April 2018

BREMA Ice Makers
www.bremaice.it
info@bremaice.it

Bim + Data download